ERSATZTEILE RAS-60YH7

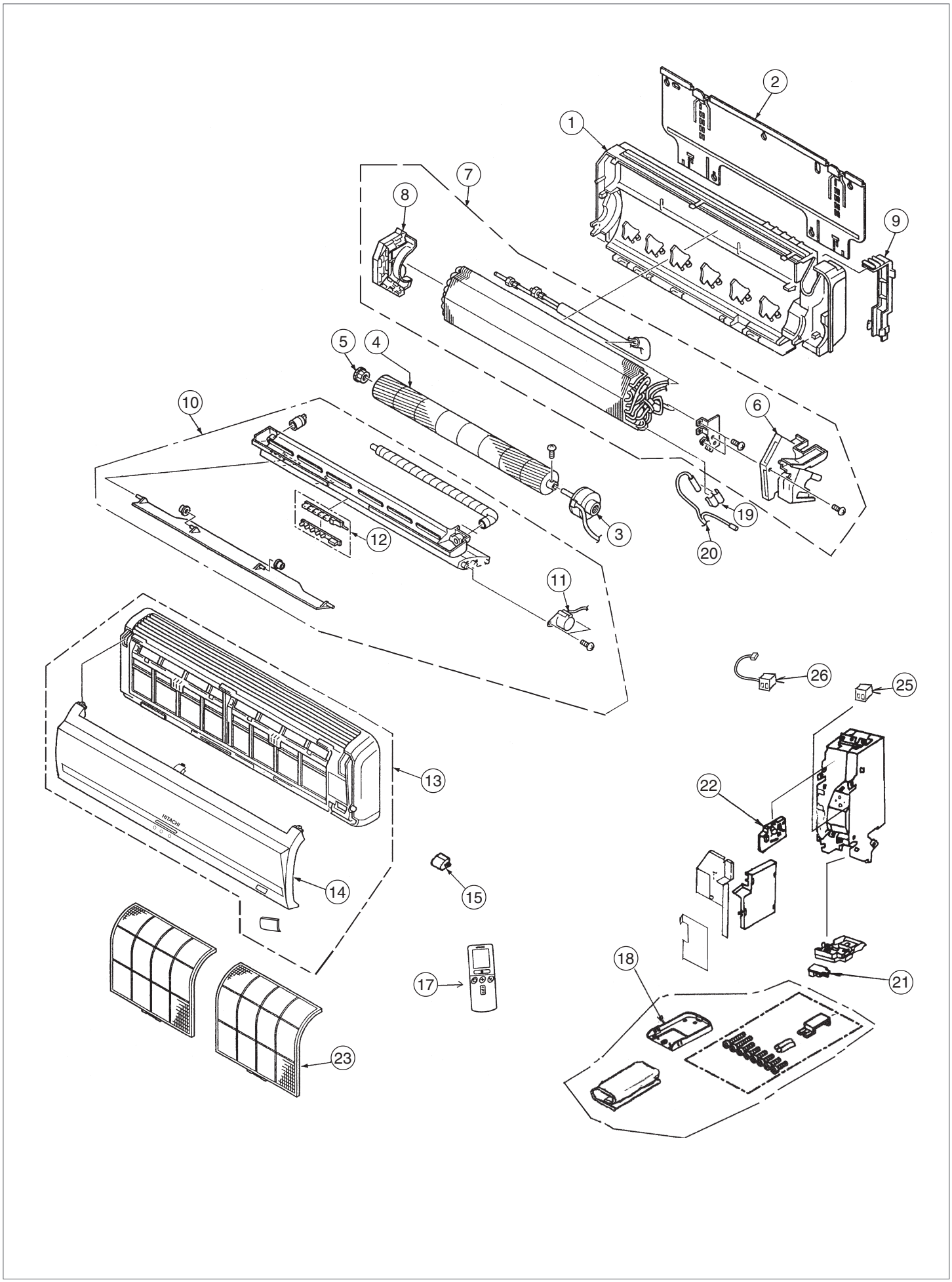

ERSATZTEILE RAS-60YH7

NO.	PART N0. RAS-60YH7	Q'TY / UNIT	PARTS NAME
1	PMRAS-70YHA 001	1	CABINET
2	PMRAS-40CNH2 R23	1	MOUNTING PLATE
3	PMRAS-70YHA R04	1	FAN MOTOR
4	PMRAS-70YHA R10	1	TANGENTIAL FAN
5	PMRAS-25CNH2 005	1	P-BEARING ASSY
6	PMRAS-51CHA1 004	1	FAN MOTOR BASE
7	PMRAS-60YHA2 R02	1	CYCLE ASSY
8	PMRAS-51CHA1 R20	1	BEARING COVER
9	PMRAS-18CP5 003	1	PIPE SUPPORT
10	PMRAS-70YHA R03	1	DRAIN PAN ASSY
11	PMRAS-18CP6 R02	1	AUTO SWEEP MOTOR
12	PMRAS-70YHA R07	1	P.W.B (LED)
13	PMRAS-60YH5 001	1	FRONT COVER ASSEMBLY
14	PMRAS-60YH5 002	1	FRONT PANEL
15	PMRAS-10C7M 008	3	CAP
17	PMRAK-18NH6A R02	1	REMOTE CONTROL ASSEMBLY
18	PMRAS-10C3M 003	1	REMOTE CONTROL SUPPORT
19	PMRAS-40CNH2 R26	1	THERMISTOR SUPPORT
20	PMRAS-70YHA R12	1	THERMISTOR
21	PMRAS-70YHA R08	1	P.W.B (RECEIVER)
22	PMRAS-60YH7 R01	1	P.W.B (MAIN)
23	PMRAS-60YH7 R02	1	FILTER
25	PMRAC-07CV1 R06	1	TERMINAL BOARD (2P)
26	PMRAS-70YHA R11	1	TERMINAL BOARD (2P)