ERSATZTEILE RAS-50FH7

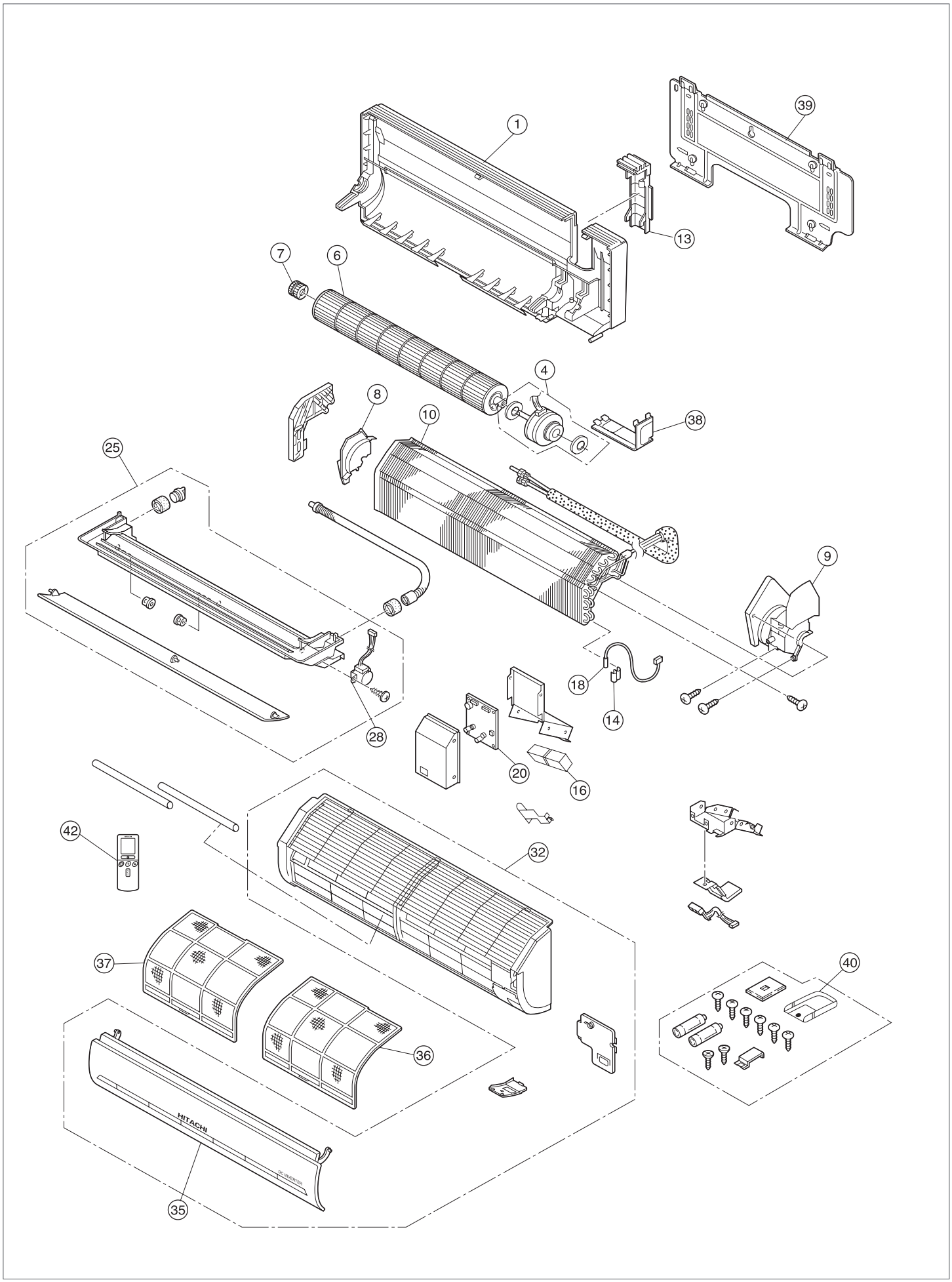

ERSATZTEILE RAS-50FH7

KAUT

NO.	PART N0.		Q'TY / UNIT	PARTS NAME
1	PMRAS-07GH4	901	1	CABINET
4	PMRAS-25YH4	S04	1	FAN MOTOR
6	PMRAS-260GA	R01	1	TANGENTIAL AIR FLOW FAN
7	PMRAS-25YH4	908	1	FAN SUPPORT ASSEMBLY
8	PMRAS-25YH4	909	1	FAN COVER
9	PMRAS-25YH4	910	1	FAN MOTOR SUPPORT
10	PMRAS-X13CX	002	1	CYCLE ASSY
13	PMRAS-S13CY	002	1	PIPE SUPPORT
14	PMRAS-25YH4	S15	1	SPRING
16	PMWS1450SI	R07	1	TERMINAL BOARD
18	PMRAS-260GHA	R01	1	THERMISTOR ASSY.
20	PMRAS-50FH6	R01	1	P.W.B (MAIN)
25	PMRAS-S10CY	005	1	DRAIN PAN ASSY.
28	PMRAS-25YH4	S29	1	AUTO SWEEP MOTOR
32	PMRAK-18NH6	002	1	FRONT COVER ASSEMBLY
35	PMRAK-18NH6	003	1	FRONT PANEL
36	PMRAK-25N6	R05	1	AIR FILTER (R)
37	PMRAK-25N6	R04	1	AIR FILTER (L)
38	PMRAS-X10CY	006	1	LOW COVER
39	PMRAS-25YH4	S40	1	MOUNTING PLATE
40	PMRAS-10C3M	003	1	REMOTE CONTROL SUPPORT
42	PMRAK-18NH6A	R02	1	REMOTE CONTROL ASSEMBLY