ERSATZTEILE RAD-18_25_35_50RPA

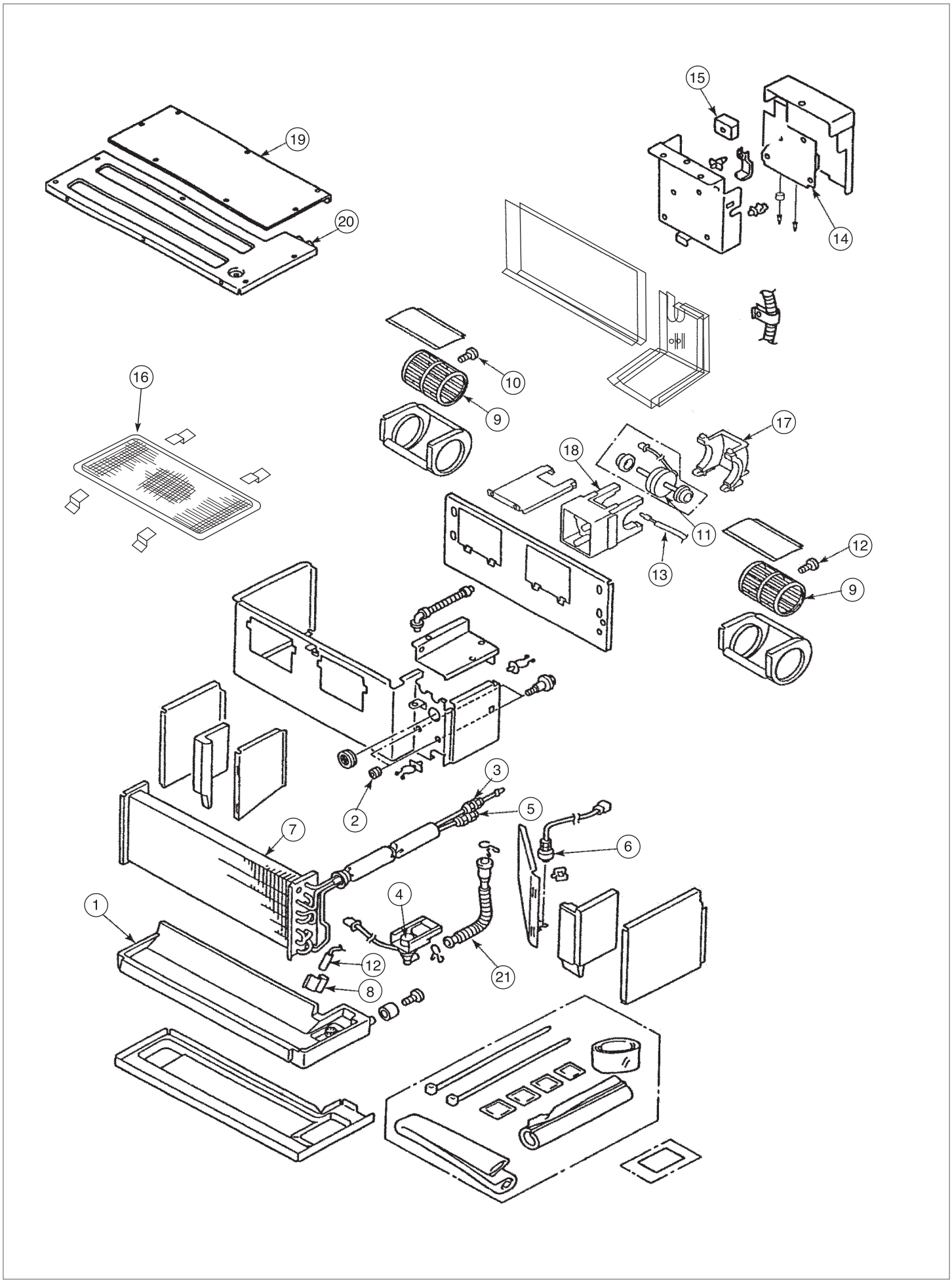

ERSATZTEILE RAD-2-RPA

KAUT

NO.	PART N0. RAD-50RPA		Q'TY / UNIT	PARTS NAME
1	PMRAD-18RPA	R03	1	DRAIN PAN
2	PMRAMD-350BW	R03	2	FAN MOTOR SUPPORT RUBBER
3	PMRAD-18RPA	R04	1	UNION (2)
4	PMRAD-28MX	R02	1	DRAIN PUMP
5	PMRAD-50RPA	R03	1	UNION (4)
6	PMRAMD-350BW	R11	1	FLOAT SWITCH
7	PMRAD-50RPA	R02	1	CYCLE ASSY
8	PMRAS-10C8M	R03	1	THERMISTOR SUPPORT
9	PMRAD-32CNH2	S06	2	SIROCCO FAN
10	PMRA-353B	R04	2	FAN BOLT
11	PMRAD-32CNH2	S05	1	FAN MOTOR
12	PMRAMD-40GX	R02	1	THERMISTOR (HEAT)
13	PMRAD-28MX	R05	1	THERMISTOR (TEMPERATURE)
14	PMRAD-50RPA	R01	1	P.W.B. (MAIN)
15	PMRAM-90QH5	S01	1	TERMINAL BOARD (2P)
16	PMRAD-18NH7	002	1	FILTER
17	PMRAD-28QH1	S07	1	FAN MOTOR SUPPORT
18	PMRAD-25QH4	S01	1	BASE (FAN MOTOR)
19	PMRAD-18NH7	S03	1	UPPER PLATE (2)
20	PMRAD-25QH4	S04	1	UPPER PLATE (1)
21	PMRAD-28MX	R03	1	DRAIN PIPE