ERSATZTEILE RA I+3 . NN?

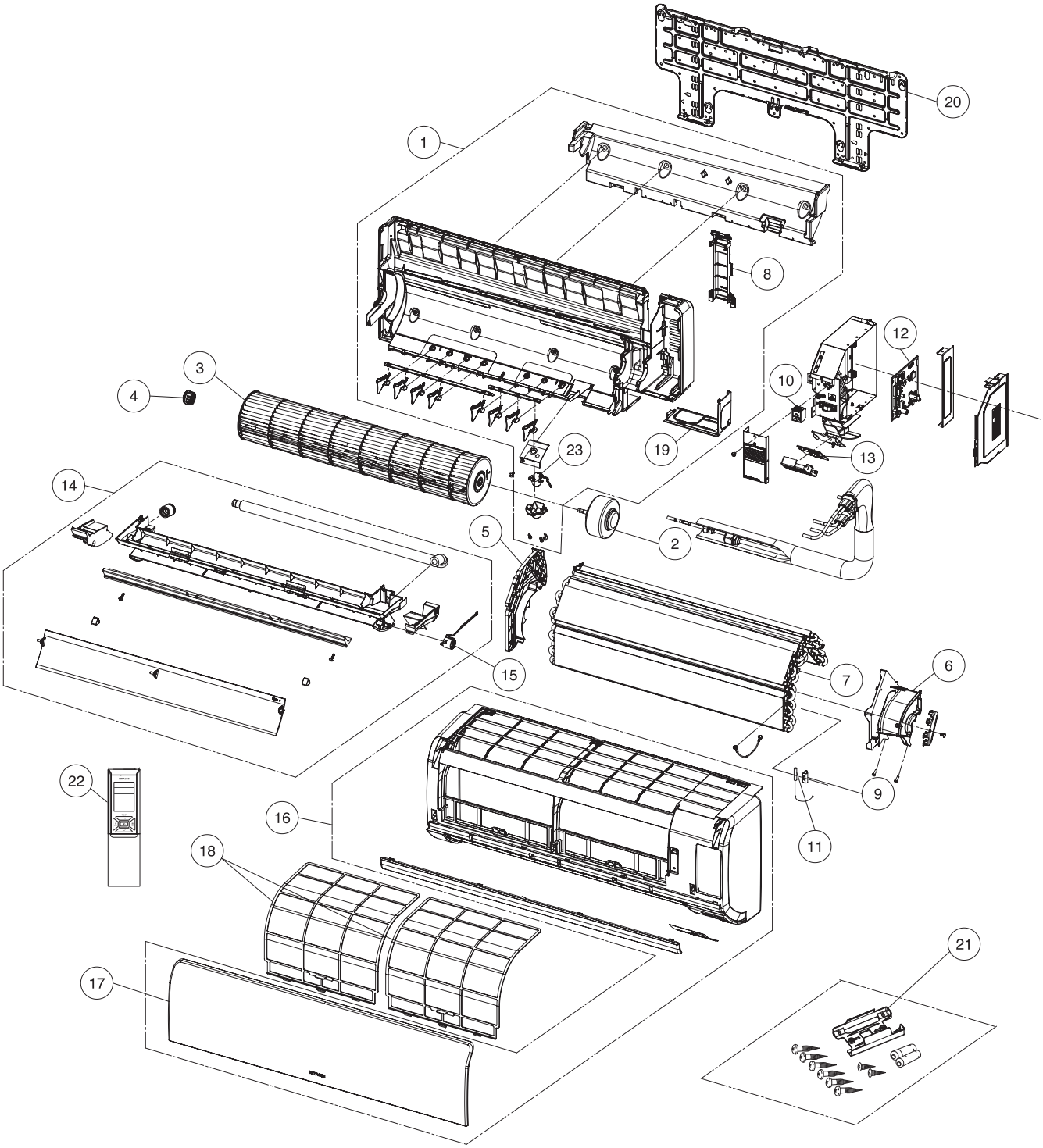

KAUT

NO.	PART N0.		Q'TY / UNIT	PARTS NAME
1	PMRAK-50PPA	R04	1	CABINET
2	PMRAS-X10CB	R07	1	FAN MOTOR
3	PMRAS-X10CB	R11	1	TANGENTIAL AIR FLOW FAN
4	PMRAS-25YH4	908	1	FAN SUPPORT ASSEMBLY
5	PMRAS-S18CPA	R07	1	BEARING COVER
6	PMRAS-S18CPA	R09	1	FAN MOTOR SUPPORT
7	PMRAK-50PPA	R06	1	CYCLE ASSY
8	PMRAS-S18CPA	R15	1	PIPE SUPPORT
9	PMRAS-40CNH2	R26	1	THERMISTOR SUPPORT
10	PMRAM-90QH5	S01	1	2P TERMINAL
11	PMRAS-X10CB	R13	1	THERMISTOR ASSY.
12	PMRAK-50PPA	R01	1	P.W.B MAIN
13	PMRAK-18QPA	R02	1	P.W.B. (RECEIVER)
14	PMRAK-50PPA	R05	1	DRAIN PAN ASSY.
15	PMRAS-S18CPA	R02	1	AUTO SWEEP MOTOR
16	PMRAK-50PPA	R03	1	FRONT COVER ASSEMBLY
17	PMRAK-18QPA	R04	1	FRONT PANEL
18	PMRAS-X10CB	R03	2	AIR FILTER
19	PMRAS-S18CPA	R20	1	S-COVER-R
20	PMRAS-S18CPA	R13	1	MOUNTING PLATE
21	PMRAK-50PPA	R07	1	REMOTE CONTROL SUPPORT
22	PMRAK-50PPA	R02	1	REMOTE CONTROL ASSEMBLY