ERSATZTEILE RAK-18_25_35_50QPA

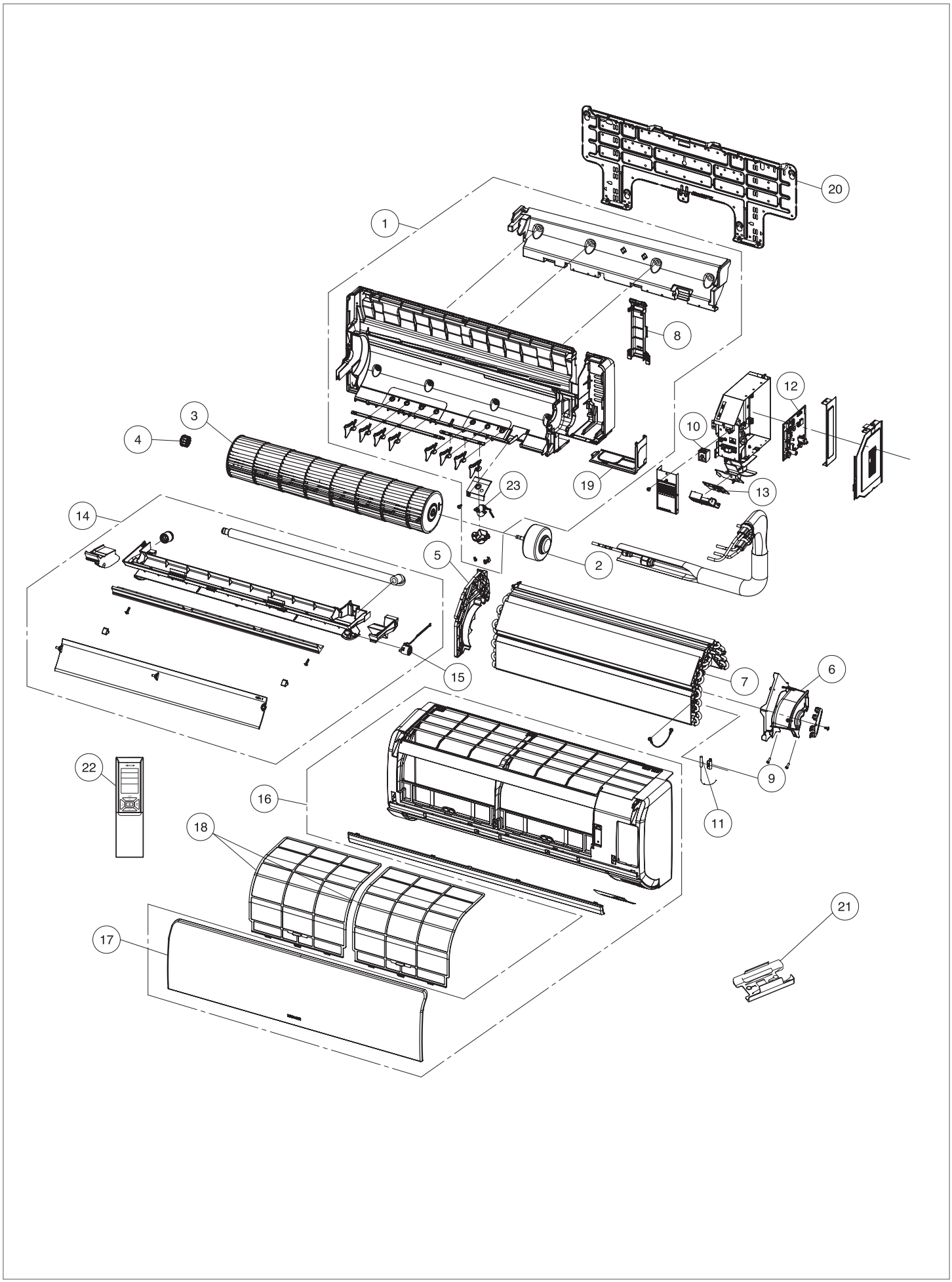

ERSATZTEILE RA I +50ON?

KAUT

NO.	PART N0. RAK-50QPA		Q'TY / UNIT	PARTS NAME
1	PMRAK-50PPA	R04	1	CABINET
2	PMRAS-X10CB	R07	1	FAN MOTOR
3	PMRAS-X10CB	R11	1	TANGENTIAL AIR FLOW FAN
4	PMRAS-25YH4	908	1	FAN SUPPORT ASSEMBLY
5	PMRAS-S18CPA	R07	1	BEARING COVER
6	PMRAS-S18CPA	R09	1	FAN MOTOR SUPPORT
7	PMRAK-50PPA	R06	1	CYCLE ASSY
8	PMRAS-S18CPA	R15	1	PIPE SUPPORT
10	PMRAM-90QH5	S01	1	TERMINAL BOARD (2P)
11	PMRAS-X10CB	R13	1	THERMISTOR ASSEMBLY
12	PMRAK-50QPA	R01	1	P.W.B MAIN
13	PMRAK-18QPA	R02	1	P.W.B RECEIVER
14	PMRAK-50PPA	R05	1	DRAIN PAN ASSY
15	PMRAS-S18CPA	R02	1	AUTO SWEEP MOTOR
16	PMRAK-50PPA	R03	1	FRONT COVER ASSEMBLY
17	PMRAK-18QPA	R04	1	FRONT PANEL
18	PMRAS-X10CB	R03	2	AIR FILTER
19	PMRAS-S18CPA	R20	1	S-COVER R
20	PMRAS-S18CPA	R13	1	MOUNTING PLATE
21	PMRAK-50PPA	R07	1	REMOTE CONTROL SUPPORT
22	PMRAK-50PPA	R02	1	REMOTE CONTROL ASSEMBLY