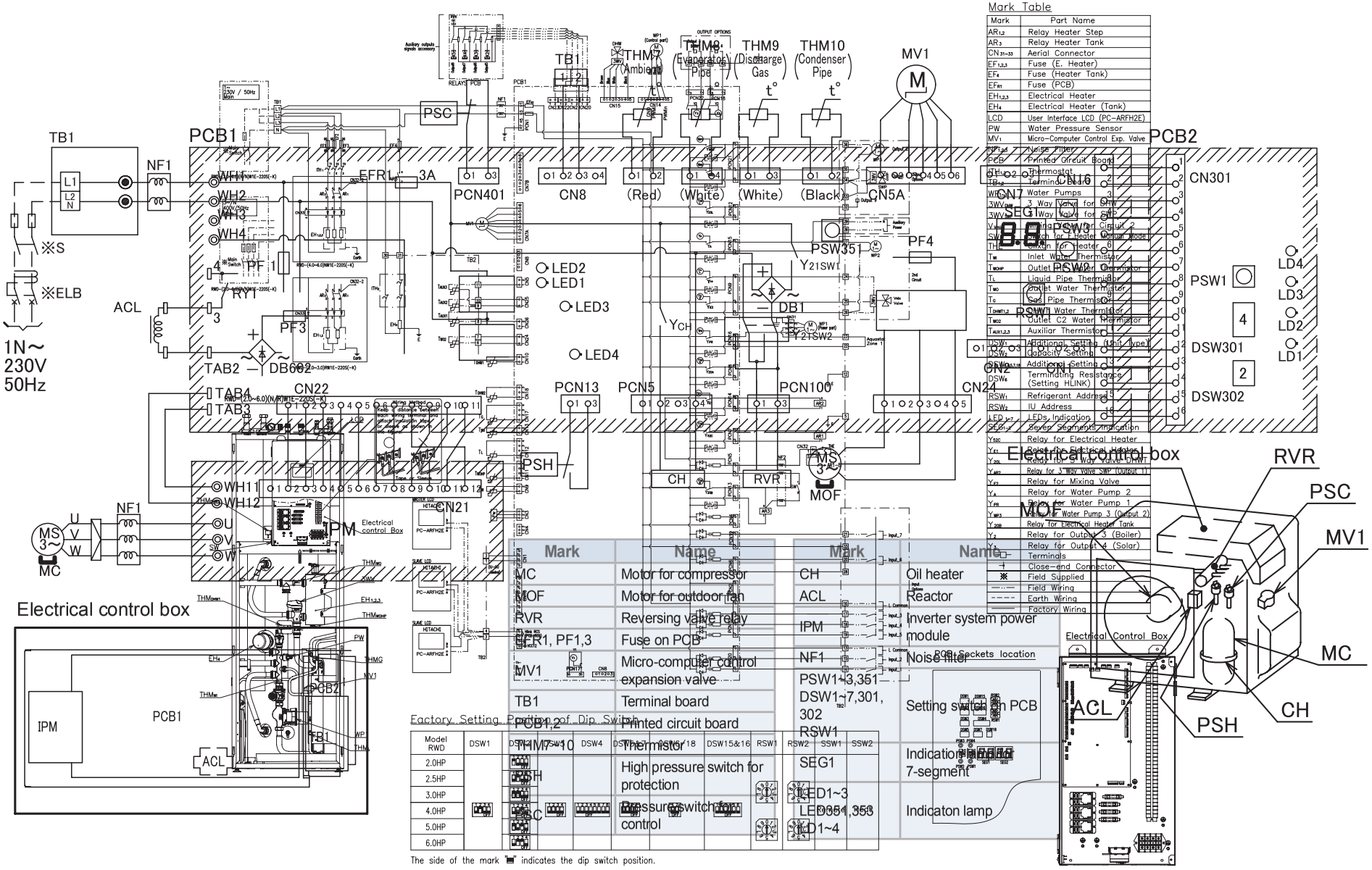Schaltplan ARWD12RP6.0N-RW1E-220S